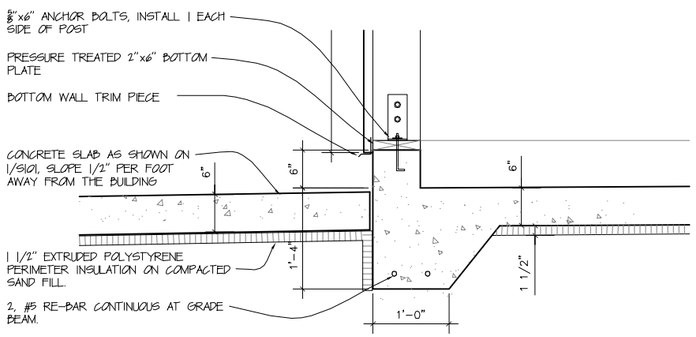

2 / S101 TYPICAL GRADE BEAM

SCALE : 1" = 1'-0"

0' 6" 1' 2'

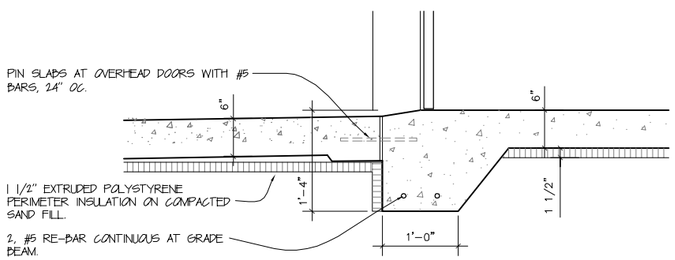

3 / S101 SLAB AT OVERHEAD DOORS

SCALE : 1" = 1'-0"

0' 6" 1' 2'

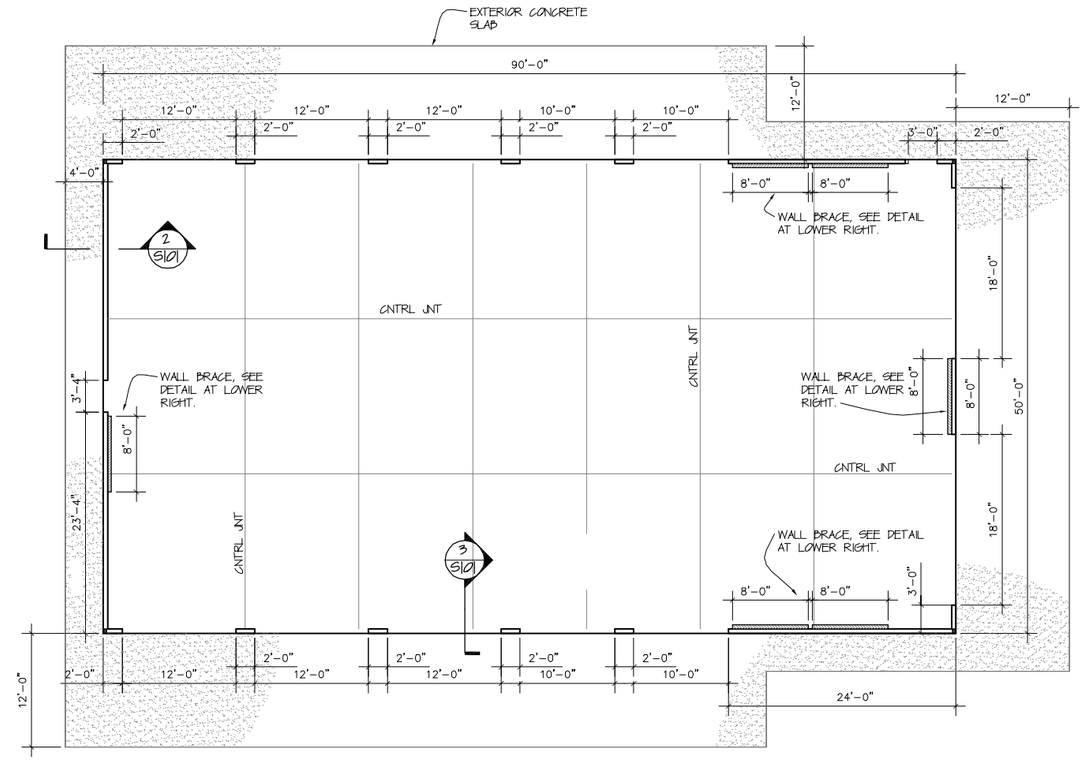

1 / S101 FOOTING & FOUNDATION PLAN

SCALE : 1/8" = 1'-0"

0' 4' 8' 16'

NORTH

ALL CAST-IN-PLACE CONCRETE SLABS FOOTINGS AND GRADE BEAMS SHALL BE MIXED TO ACHIEVE A COMPRESSIVE STRENGTH 4,000 PSI MINIMUM, AND SHALL BE AIR ENTRAINED.

CONCRETE MIX SHALL CONTAIN FIBRILLATED FIBERMESH REINFORCING, 15 LBS PER CUBIC YARD.

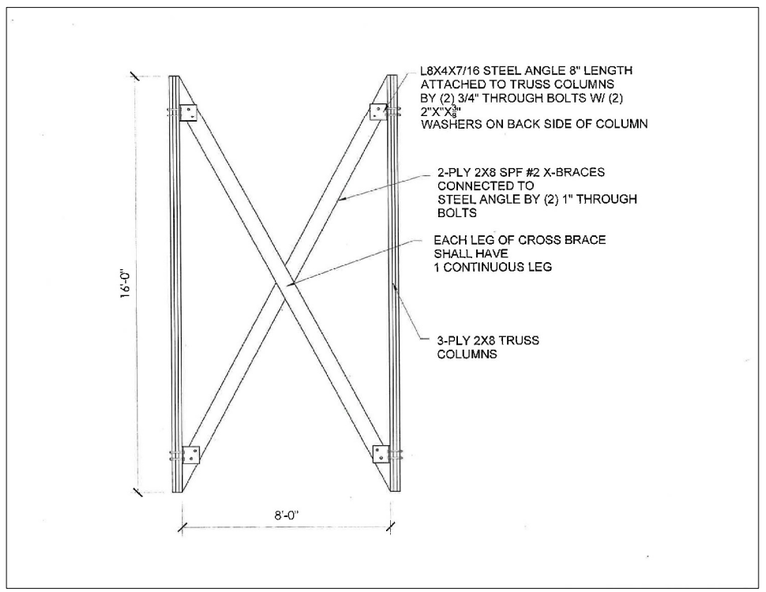

LATERAL WALL BRACING DETAIL, TO BE INSTALLED AT LOCATIONS SHOWN ON THE PLAN ABOVE.

© arc ◘ central inc. 2016

arc ◘ central inc.
Lucas Dolan
architecture construction management interior design
1930 1st street north, wisconsin rapids, wi 54494
jlucas@arccentralinc.com 715.572.2698

FOOTING & FOUNDATION PLAN

VEHICLE STORAGE BUILDING
FOR
WOOD COUNTY PARK & FORESTRY DEPT.
400 MARKET STREET
WISCONSIN RAPIDS, WI 54494

REVISIONS

Schem Des. 1/28/16
Rev 1 Appr 3/5/16
Bidding 4/5/16

DATE
Jan. 28, 2016

PROJECT NO.
16 001

S101

COPYRIGHT © arc ◘ central inc, 2016. All rights reserved.